Worlds Valve

Tianjin Worlds Valve Co.,Ltd



Operation And Maintenance Manual

AWWA C504 25PSI 75PSI 150PSI 250PSI

Rubber-Seated Butterfly Valves

CBF01/02-TF02

CE 0038 ISO9000 WRAS APPROVED PRODUCT ACS Attestation de Conformité Sanitaire

Introduction of the valve

Introduction

The butterfly valve was introduced in 1965 for clean water applications. The rubber seat provided a „zero leakage" alternative for metal-seated valves common at that time. Today, WDS"s offers flow control advantages and economy vs. Worlds produces butterfly valves in accordance with the American Water Works Association (AWWA) C504 standard.

The valve body shall be U section design and a concentric disc and seat configuration to allow for 52"-80" of piping insulation,have flange hole drilling per international flange standards and be provided with a non-corrosive bushing and self-adjusting stem seal. . The valve disc edge and hub on metal discs shall be spherically machined and hand polished for minimum torque and maximum sealing capability. The valve seat shall be a tongue-and groove design . The seat shall totally encapsulate the body isolating the body from the line media and no flange gaskets shall be required. The U section valve shall be rated for bubble-tight shut-off for bidirectional service to 10 Bar on sizes 52"-80" (1300mm-2000mm). The valve shall be tested for tight shut-off to 110% of the rated pressure.

Application Field

The products are used in a wide range of industries worldwide including:

Chemical Beverage
Brewing/Wine Making
Pharmaceutical
Food Processing
Petroleum Refining & Oilfield
Transportation
Ultrapure Water
Marine
Pulp & Paper
Mining
Power/FGD
Nuclear Power
Irrigation
Water & Wastewater Treatment
Textile Desalination
Steel Production
Sugar/Ethanol
HVAC



Introduction of the valve

Valve Type:

CBF01/02-TF02

Body:

Shall be one-piece U section design to allow for 52”-80“ of piping insulation.

Flange locating holes shall be provided on U section bodies to allow for quick and precise alignment during valve installation.

Flange hole drilling per international flange standard as specified.

A non-corrosive bushing and a self-adjusting stem seal shall be provided. No field adjustment shall be necessary to maintain optimum field performance.

Disc:

Disc edge and hub on metal discs shall be spherically machined and hand polished for torque and maximum sealing capability

Stem:.

Stem shall be mechanically retained in the body neck and no part of the stem shall be exposed to the line media.

Seat:

Shall be tongue-and-groove seat

The seat shall totally encapsulate the body isolating it from the line media and no flange gaskets shall be required.

Features

1.Small in size and light in weight. Easy installation and maintenance. It can be mounted wherever needed.

2.Simple and compact construction, quick 90degrees on-off operation.

3.Minimized operating torque, energy saving.

4.Bubbles-tight sealing with no leakage under the pressure test

5.Wide selection of materials, applicable for various medium.

6.Long service life. Standing the test of tens of thousands opening/closing operations.

7.Flow curve tending to straight line. Excellent regulation performance.



1	Shaft	SS410 SS304 SS431 SS316
		MONEL K500 17-4PH
		C62300 C92200
		2507 2205
2	Screw	Stainless Steel
	Gland	Carbon Steel
3	Shaft Retainer	Stainless Steel
		Carbon Steel
4	Packing Gland	Carbon Steel
5	Packing	NBR/EPDM
6	Bushing	Luberized Bronze
7	Body	GG20 GG25
		GGG40 GGG45 GGG50
8	Body seat	NBR(BUNA-N)
		EPDM
		HEPDM
		FKM(VITON)
		Polychloroprene
		Natural Rubber
		Sillicon Rubb
9	Disc	GGG40 GGG45 GGG50
		WCB WCC LCC LCB
		CF8 CF8M CF3 CF3M
		C95800 C95400



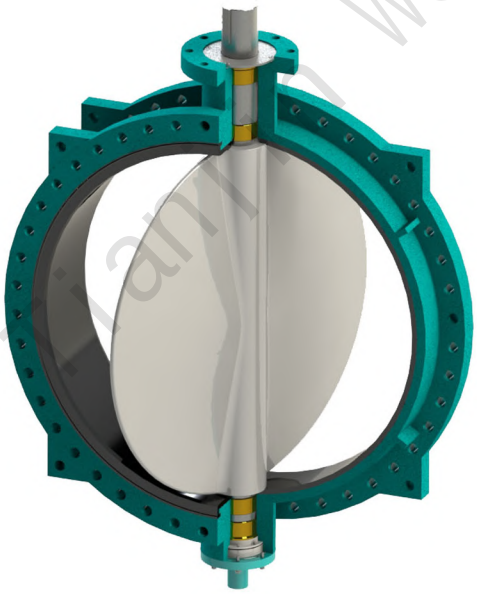

10	Bushing	Luberized Bronze
11	Packing	EPDM/NBR
12	Packing Gland	Carbon Steel
13	Bearing	Assembly
14	Cover	Carbon Steel
15	“O” Ring	NBR
16	End Cover	GG20 GG25
		GGG40 GGG45 GGG50
17	“O” Ring	NBR
18	Screw	Stainless Steel
19	Shaft	SS410 SS304 SS431 SS316
		MONEL K500 17-4PH
		C62300 C92200

Tianjin Worlds Valve Co., Ltd.

Notice



WARNING indicates a potentially hazardous situation which, if not avoided, could result in death or serious injury.



CAUTION indicates a potentially hazardous situation which, if not avoided, could result in death or serious injury.

NOTICE used without the safety alert symbol indicates a potential situation which,if not avoided, may result in an undesirable result or state, including property damage.



CAUTION It is very important before installation to ensure the critical chord dimension of the disc at the full open position is less than the adjacent pipe flange I.D.

Shipment & Storage

A. The seat, disc, stem and bushing of the resilient seated butterfly valve should be coated with silicone lubricant

B. The disc should be positioned at 10° open.

C. Valves should be stored indoors with a preferred tempera ture range from 40° F (4°C) to 85° F (29°C).

D. When valves are stored for a long time, open and close the valves once every 3 months.

E. Ship and store valves so that no heavy loads are applied to the bodies.

Installation Considerations – Piping and Valve Orientation and Placement

Piping and Flanged Compatibilities Piping

These valves have been engineered so that the critical disc chord dimension at the full open position will clear the adjacent inside diameter of most types of piping, including Schedule 40, lined pipe,heavy wall, etc

Metal Flanges

Resilient seated butterfly valves have been designed to be suitable for all types of flanges (ASME,,AWWA), whether flat-faced Proper alignment of any butterfly valve between flanges is critical to good performance of the valve. The flange bolts must also be evenly tightened around the circumference of the valve, providing consistent flange compression of the molded o-ring in the seat face

Valve Location

a. Resilient seated butterfly valves should be installed if possible a minimum of 6 pipe diameters from other line elements, i.e., elbows, pumps, valves, etc. of course, 6 pipe diameters are not always practical, but it is important to achieve as much distance as possible.

b. Where the resilient seated butterfly valve is connected to a check valve or pump, use an expansion joint between them to ensure the disc does not interfere with the adjacent equipment.

Valve Orientation

a. In general, WDS recommends the resilient seated valve be installed with the stem in the vertical position and the actuator mounted vertically directly above the valve; however, there are those applications as discussed below where the stem should be horizontal.

NOTE: WDS does not recommend valves be installed in an upside-down position.

b.For slurries, sludge, mine tailing, pulp stock, dry cement, and any media with sediment or particles, WDS recommends the resilient seated valve be installed with the stem in the horizontal position with the lower disc edge opening in the down stream direction.

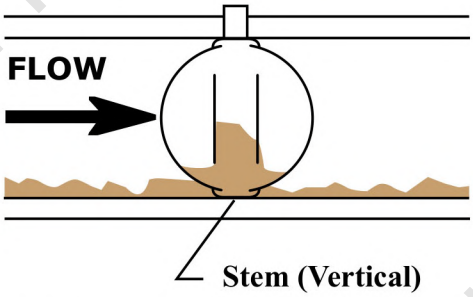

INCORRECT INSTALLATION
Sludge builds up on disc

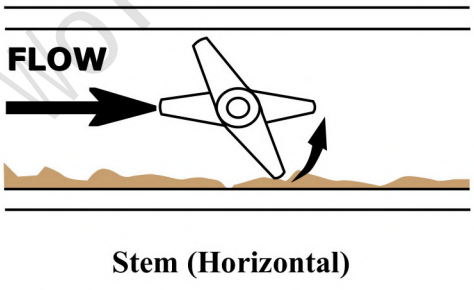

CORRECT INSTALLATION
Sludge passes under disc

Insert Resilient Seated Butterfly Valve Between Flanges

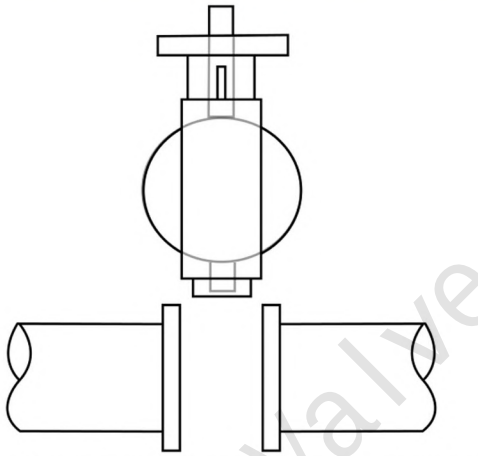

INCORRECT INSTALLATION

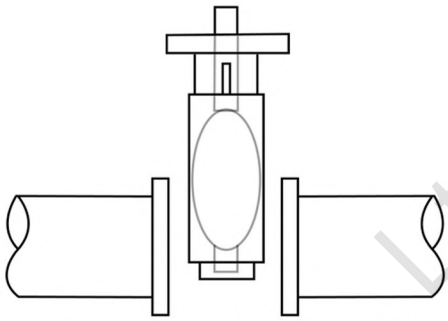

CORRECT INSTALLATION

CAUTION

Pipe not spread, disc opened beyond valve body face; Results; Disc edge damaged when it hits pipe flange.

Pipe spread and aligned, disc rotated; Results; no undesirable beginning seating/unseating torque, disc edge protected.

Place the valve between the flanges, center it, and then span the valve body with all flange bolts,but do not tighten the bolts. Carefully open the disc to the full open position, making sure the disc does not hit the adjacent pipe I.D. Now systematicallyremove jack bolts or other flange spreaders, and hand-tighten the flange bolts as shown in Figure 2 below. Very slowly close the valve disc to ensure disc edge clearance from the adjacent pipe flange I.D. Now open the disc to full open and tighten all flange bolts per specification as shown in Figure 2. Finally, repeat a full close to full open rotation of the disc to ensure proper clearances

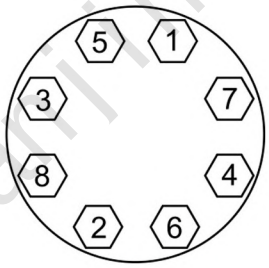

Figure 2 – Flange Bolt Tightening Pattern

Initial Centering & Flanging of Valve

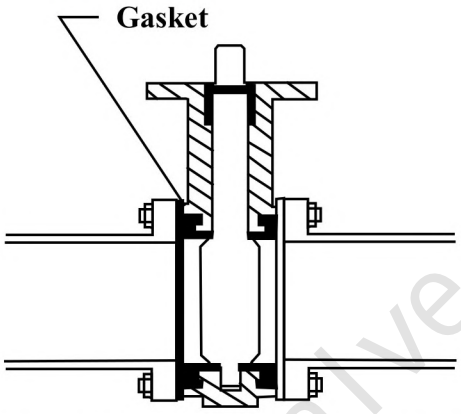

INCORRECT INSTALLATION

Disc in closed position; gaskets used; Results – Seat distorted and over-compressed causing high initial unseating torque problems.

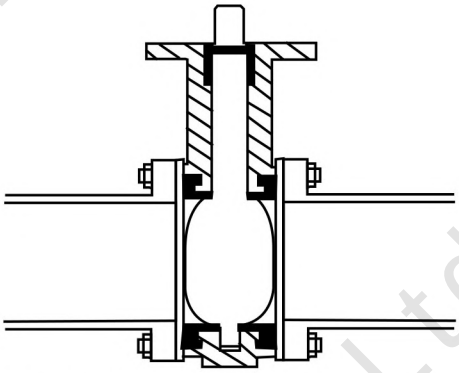

CORRECT INSTALLATION

Bolts snugged, not torqued tight, disc edge within body face-to-face but not fully closed, no flange gaskets; Results: No disc edge damage, proper sealing allowed.

Final Aligning & Tightening of Flange Bolts

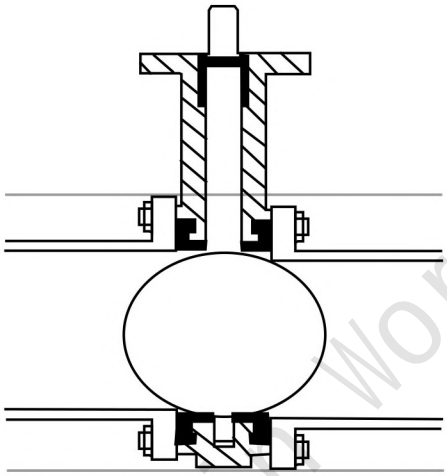

INCORRECT INSTALLATION

Piping misaligned; Results Disc O.D. strikes pipe I.D. causing disc edge damage, increased torque & leakage. Seat face o-rings will not seal properly with incorrectly aligned piping.

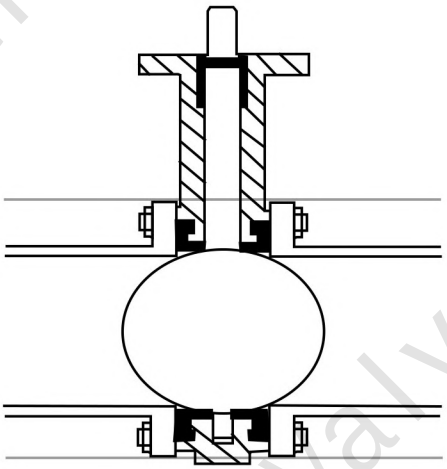

CORRECT INSTALLATION

Piping aligned properly when bolts tightened, disc in full open position; Results – disc clears adjacent pipe I.D., seat face seals properly, no excessive initial torque.

Size&Quantity of Bolts for Valve Installation

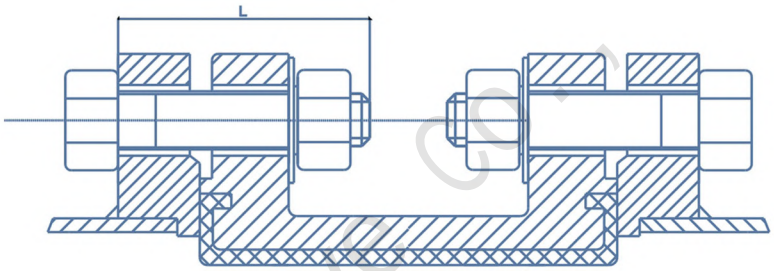

SIZE	UN	L(Length)	Bolt Qty	Nut Qty	Plain Washers Qty	Lock Washers Qty
52"	1¾"-8UN-2B	227	88	88	88	88
54"	1¾"-8UN-2B	267	88	88	88	88
60"	1¾"-8UN-2B	235	104	104	104	104
66"	1¾"-8UN-2B	247	104	104	104	104
72"	1¾"-8UN-2B	253	120	120	120	120
78"	2"-8UN-2B	279	128	128	128	128

Cv Value of Butterfly Valve

Size	Flow in Gpm@1 PSI P@ Various Disc Angles								
(mm)	10°	20°	30°	40°	50°	60°	70°	80°	90°
50	0.1	5	12	24	45	64	90	125	135
65	0.2	8	20	37	65	98	144	204	220
80	0.3	12	22	39	70	116	183	275	302
100	0.5	17	36	78	139	230	364	546	600
125	0.8	29	61	133	237	392	620	930	1022
150	2	45	95	205	366	605	958	1437	1579
200	3	89	188	408	727	1202	1903	2854	3136
250	4	151	320	694	1237	2047	3240	4859	5340
300	5	234	495	1072	1911	3162	5005	7507	8250
350	6	338	715	1549	2761	4568	7230	10844	11917
400	8	464	983	2130	3797	6282	9942	14913	16388
450	11	615	1302	2822	5028	8320	13168	19752	21705
500	14	971	1674	3628	6465	10698	16931	25396	27908
600	22	1222	2587	5605	9989	16528	26157	39236	43116
700	30	1633	3522	7630	12599	20036	30482	46899	58696
800	45	2387	4791	8736	13786	20613	31395	48117	68250
900	60	3021	6063	11055	17449	26086	39731	60895	86375
1000	84	4183	8395	15307	24159	36166	55084	84425	119750
1200	102	4651	10365	17010	27242	43853	70431	108968	132888

Tianjin Worlds Valve Co., Ltd.

Drawing

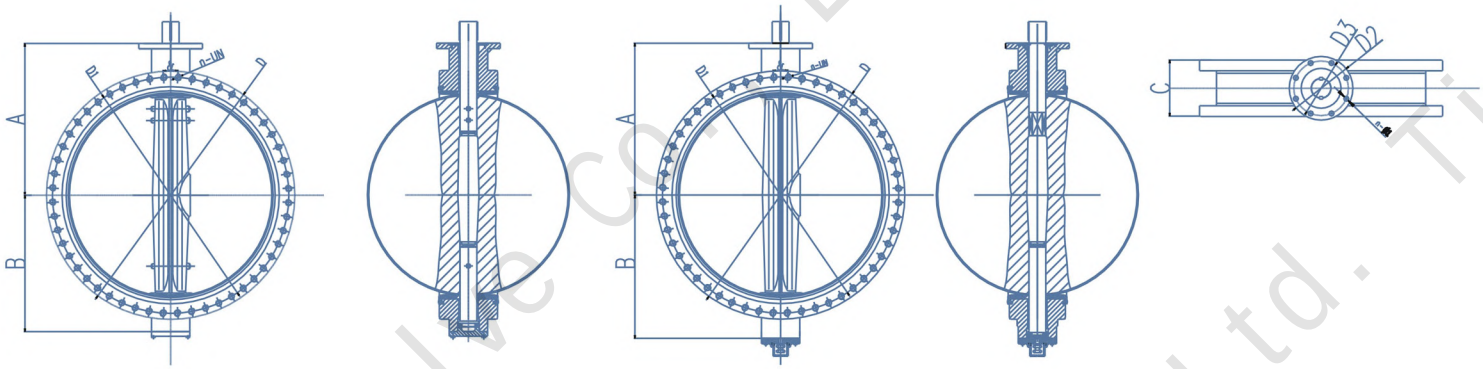

Outline Dimensions

SIZE	A	B	C	ISO5211	D2	D3	n-ø1
52″	990	890	381	F35	415	356	8-ø32
54″	1030	950	381	F35	415	356	8-ø32
60″	1050	975	381	F35	415	356	8-ø32
66″	1226	1116	457	F40	475	406	8-ø38
72″	1315	1215	457	F48	560	483	12-ø38
78″	1432	1332	457	F48	560	483	12-ø38

Connection Dimensis

SIZE	D	D1	n-UN	&°
52″	1625.6	1536.7	44-1¼-8UN-2B	8.18
54″	1682.7	1593.85	44-1¼"8UN-2B	8.18
60″	1854.2	1758.95	52-1¼"8UN-2B	6.92
66″	2032	1930.4	52-1¼"8UN-2B	6.92
72″	2197.1	2095.5	60-1¼"8UN-2B	6
78″	2362.2	2260.6	64-2"8UN-2B	5.625

Tianjin Worlds Valve Co., Ltd.

Troubleshooting Guide

Problem	Causes	Remedies
High Torque	Pinched seats Flange bolts are not evenly torqued Over-torqued bolts	Loosen the flange bolts. Manually pir the disc through the valve a few times to reshape the seat. Tighten the flange bolts in the correct sequence.
	Valve installed to close to reduction, strainer, elbow or other obstruction	Change piping or location to the valve or up grade the torque on actuator
	Obstruction in the pipeline	Remove valve from pipeline and remove the obstruction
	Valve stem or disc bent	Return valve to factory for replacement
	Scale buildup on stem or seat	Open and close the valve several times. Operate the valve at least monthly. Check seat for deterioration. Flush system periodically. Excessive addition of chemicals at one time may coat the surface of valve seat and disc.
	Improper pipe supports	Install piping supports
	Improperly welded flange	Re-weld flange properly
	Actuator is not properly adjusted	Reset stops in actuator
Leakage when valve in closed position	Line pressue is higher than the valve's rated close off pressure	Reduce line pressure to valves rated close off pressure, or upgrade actuator
	High Torque	See 'High Torque' above.
Leakage past the flange face	Flange bolts are not evenly torqued	Loosen the flange bolts. Tighten the flange bolts in the correct sequence.
Valve opens only a few degrees and stops	Improper installation. Valve is not aligned properly	Loosen the flange bolts, realign the valve with flanges and retighten the flange bolts to the correct torque.

Tianjin Worlds Valve Co.,Ltd.

天津沃得斯阀门有限公司

International Sales Department:

QQ:596019673

Face Book: Fan Diego

Tel:0086-22-28522277

Skype:Diegofan3

Domestic Sales Department:

QQ:915085812

Fax: 0086-22-28522288

Website : www.worldsvalve.com

Linkedin: TianJin Worlds Valve Co., Ltd

Email: worlds@worldsvalve.com

sales@worldsvalve.com

Address: NO.25 Fuhui Road,Beizhakou Industrial Park,

Jinnan District,Tianjin-China

